SURVEY STATION CO-ORDINATES				
STATION	EASTING	NORTHING	R.L	DESCRIPTION
10	247284.502	7410889.779	6.257	Punch Mark in Old Rail
11	247317.881	7410882.380	6.313	Star Picket (short)
12	247352.852	7410835.815	6.332	Dumpy with nail
13	247497.907	7410767.785	5.388	Star Picket (short)
PSM 45159	247441.735	7410791.220	5.534	Under Tower

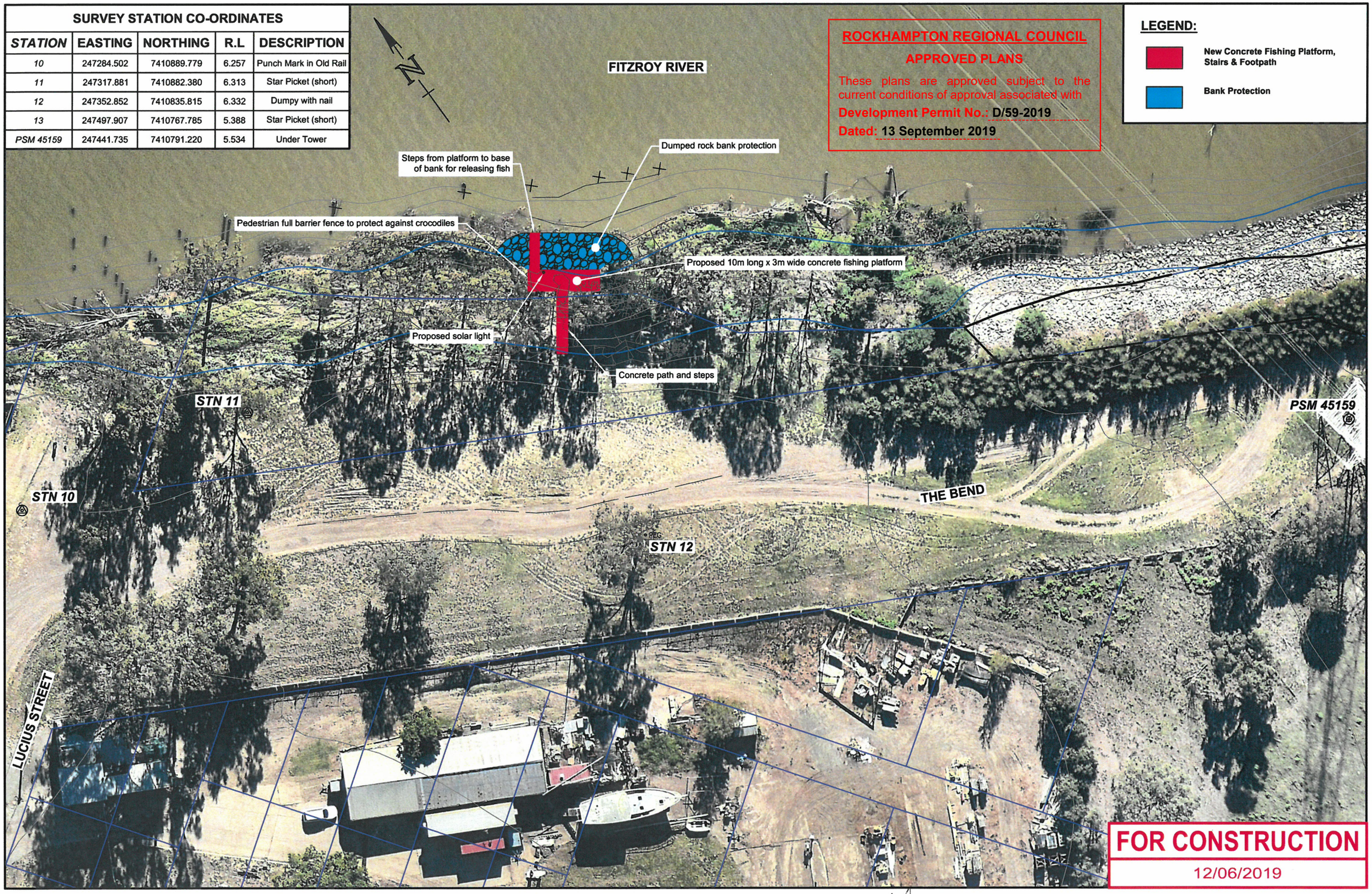

ROCKHAMPTON REGIONAL COUNCIL

APPROVED PLANS

These plans are approved subject to the current conditions of approval associated with

Development Permit No.: D/59-2019

Dated: 13 September 2019

LEGEND:

- New Concrete Fishing Platform, Stairs & Footpath
- Bank Protection

FOR CONSTRUCTION

12/06/2019

Surveyed: NS	Date: MAY '17				
Ref Mark: PSM 45159	R.L. 5.534				
Datum: Horiz.GDA '94 Vert. AHD					
Zone: 56	Survey Book:NS03				
File Ref: 2017-214-01.dwg					
XREF: 2017-214-00.dwg					
Aux Plans:					

0 5 10m 1:500 PLAN

SCALES FULL SIZE A3

	AMENDMENTS DESCRIPTION	DRAWN	APPR'D	DATE
B	Solar light added	RWB		
A	Original Issue	RWB	M CROW	FEB '18

Rockhampton Regional Council

Designed	RWB	JAN '17
Checked	BG	6/19
Examined		
Recomm.	RW	6/19

APPROVAL

RPEQ No 7187 DATE 19/6/19

MANAGER INFRASTRUCTURE PLANNING

FISHING PLATFORM

LUCIUS STREET & THE BEND INTERSECTION (DEPOT HILL)

LAND BASED FISHING INFRASTRUCTURE

OVERALL LAYOUT PLAN

Dwg No. 2017-214-01

Sheet No. 1 of 3

Job No: C1074780

A B

O:\Regional\Eng\Design\Design Office Projects\2017\214 - Lucius Street Fishing Platform\ACAD Dwgs\2017-214-01B,02B,03B.dwg, 12/06/2019 11:33:59 AM, bywaterr

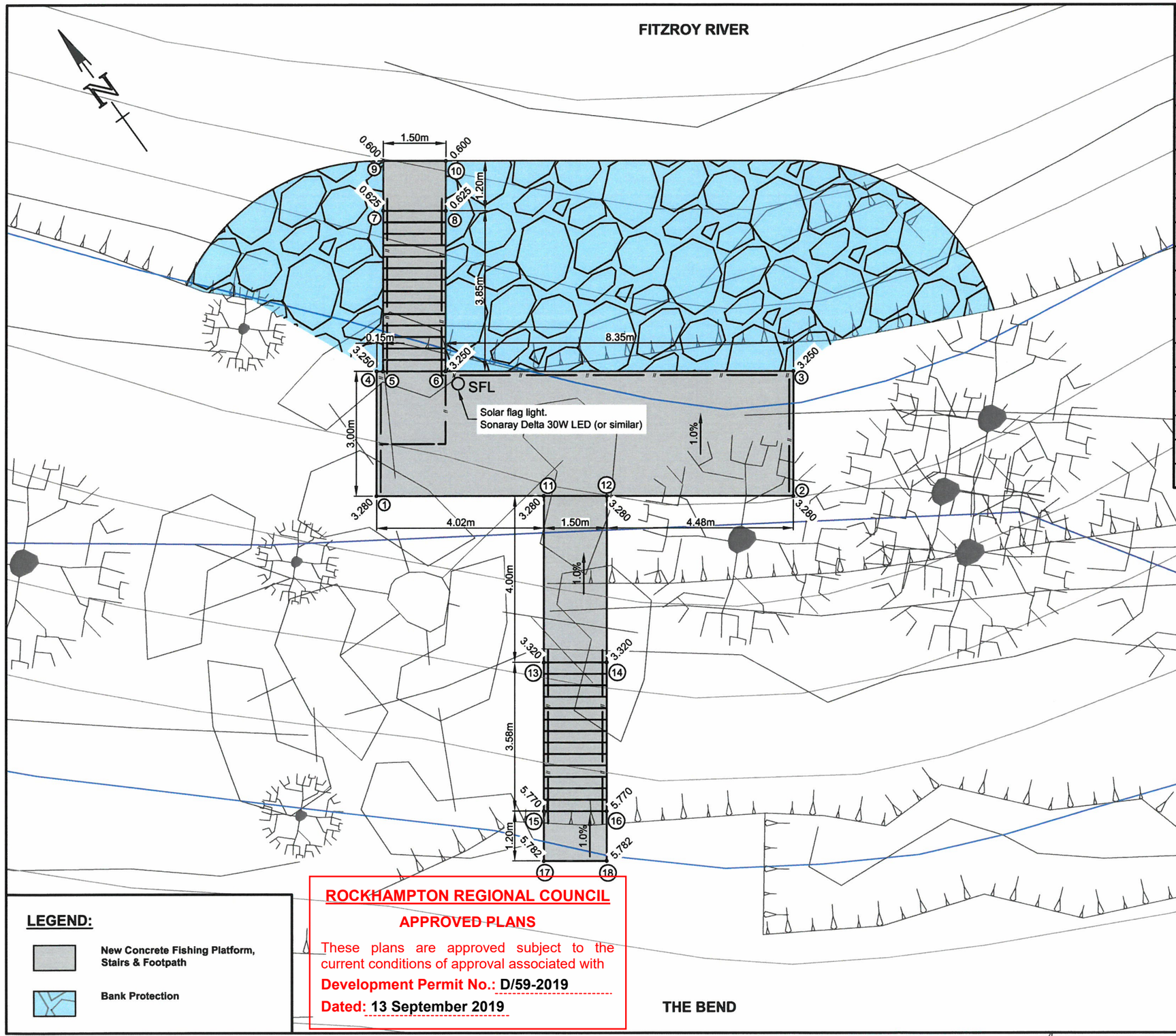

CONCRETE SLAB & STAIRS SETOUT TABLE

POINT NO.	EASTING	NORTHING	R.L	DESCRIPTION
1	247359.536	7410873.167	3.280	Corner of Concrete Slab
2	247367.629	7410867.294	3.280	Corner of Concrete Slab
3	247369.391	7410869.722	3.280	Corner of Concrete Slab
4	247361.297	7410875.595	3.250	Corner of Concrete Plan
5	247361.419	7410875.507	3.250	Edge of Landing
6	247362.633	7410874.626	3.250	Edge of Landing
7	247363.680	7410878.623	0.625	Edge of Landing
8	247364.894	7410877.742	0.625	Edge of Landing
9	247364.385	7410879.594	0.600	Edge of Landing
10	247365.599	7410878.713	0.600	Edge of Landing
11	247362.790	7410870.805	3.280	Edge of Concrete Path
12	247364.004	7410869.924	3.280	Edge of Concrete Path
13	247360.441	7410867.568	3.320	Edge of Concrete Path
14	247361.655	7410866.687	3.320	Edge of Concrete Path
15	247358.341	7410864.674	5.770	Edge of Landing
16	247359.555	7410863.793	5.770	Edge of Landing
17	247357.637	7410863.703	5.782	Edge of Landing
18	247358.851	7410862.822	5.782	Edge of Landing

LEGEND:

- New Concrete Fishing Platform, Stairs & Footpath
- Bank Protection

ROCKHAMPTON REGIONAL COUNCIL

APPROVED PLANS

These plans are approved subject to the current conditions of approval associated with

Development Permit No.: D/59-2019

Dated: 13 September 2019

FOR CONSTRUCTION

12/06/2019

Surveyed: NS	Date: MAY '17		
Ref Mark: PSM 43159	R.L. 5.534		
Datum: Horiz.GDA '94	Vert. AHD		
Zone: 56	Survey Book:NS03		
File Ref: 2017-214-02.dwg			
XREF: 2017-214-00.dwg			
Aux Plans:			

0 1.0 2.0m 1:100 PLAN

SCALES FULL SIZE A3

	AMENDMENTS DESCRIPTION	DRAWN	APPR'D	DATE
B	Platform level increased by 100mm	RWB		
A	Original Issue	RWB	M CROW	FEB '18

Rockhampton Regional Council

Designed	RWB	JAN '17
Checked	BG	6/19
Examined		
Recomm.	RW	6/19

APPROVAL

RPEQ No 7157 DATE 19/6/19

MANAGER INFRASTRUCTURE PLANNING

FISHING PLATFORM

LUCIUS STREET & THE BEND INTERSECTION (DEPOT HILL)

LAND BASED FISHING INFRASTRUCTURE

LAYOUT PLAN & SETOUT

Dwg No. 2017-214-02

Sheet No. 2 of 3

Job No: C.1074780

A B

O:\Regional\Eng\Design\Design Office Projects\2017\214 - Lucius Street Fishing Platform\ACAD Dwgs\2017-214-01B,02B,03B.dwg, 12/06/2019 11:35:00 AM, bywaterr

CONSTRUCTION NOTES:

1. Concrete slab, stairs and path to be 200mm thick with SL81 reinforcement centrally placed
2. Minimum concrete class S50/20 to comply with MRTS70
3. Platform fence to be painted or powder coated aluminum
4. Lower stairs (river access) handrails to be marine grade grade 316 stainless steel
5. Stairs and handrails to be constructed according to AS 1428.1
6. Concrete paths to be constructed according to CMDG Standard Drawing CMDG-R-51
7. 75mm crushed rock to be graded in accordance with TMR standard drawing 4021 and compacted in accordance with MRST300
8. Geotextile specificaton to be in accordance with TMR standard drawing 4021 and placed in accordance with MSTS300

ROCKHAMPTON REGIONAL COUNCIL

APPROVED PLANS

These plans are approved subject to the current conditions of approval associated with

Development Permit No.: D/59-2019

Dated: 13 September 2019

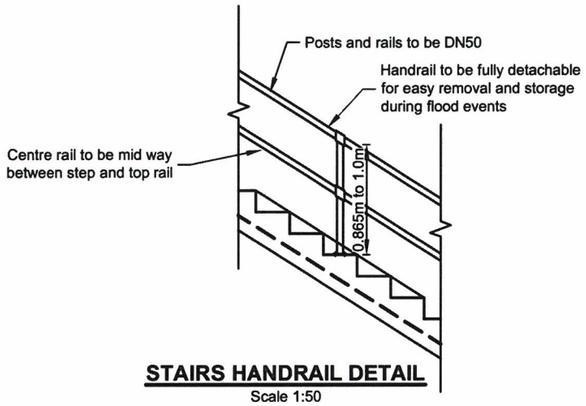

STAIRS HANDRAIL DETAIL
Scale 1:50

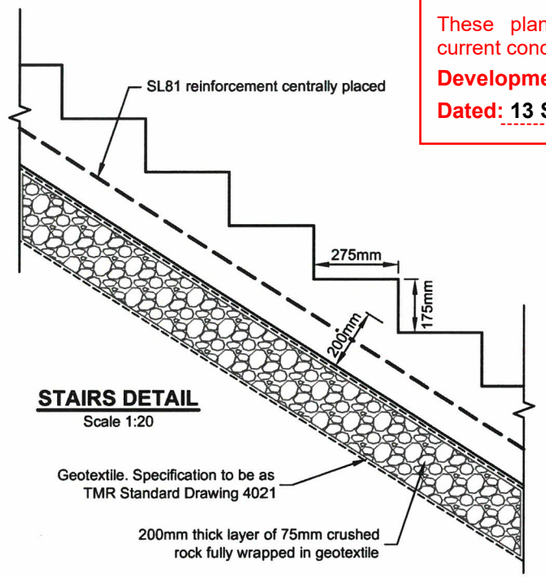

STAIRS DETAIL
Scale 1:20

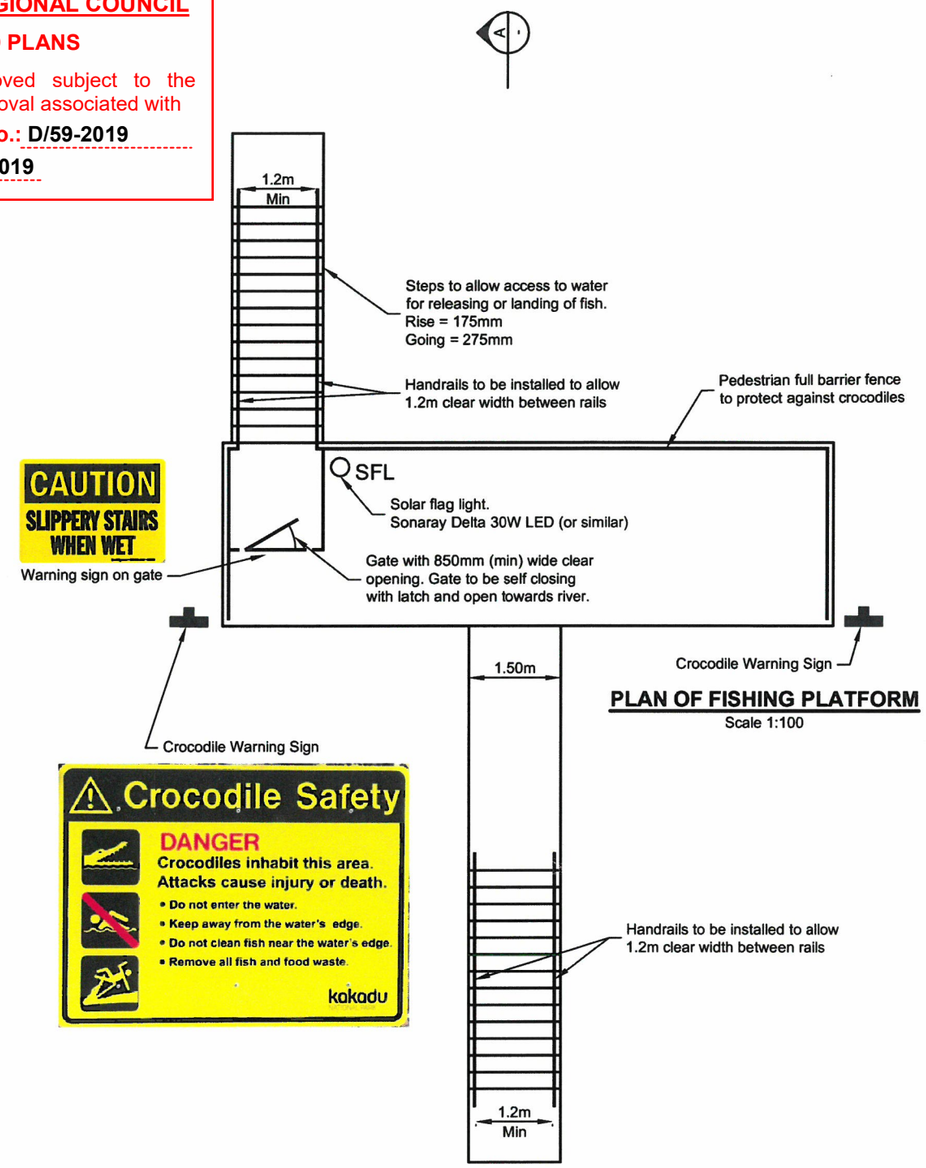

PLAN OF FISHING PLATFORM
Scale 1:100

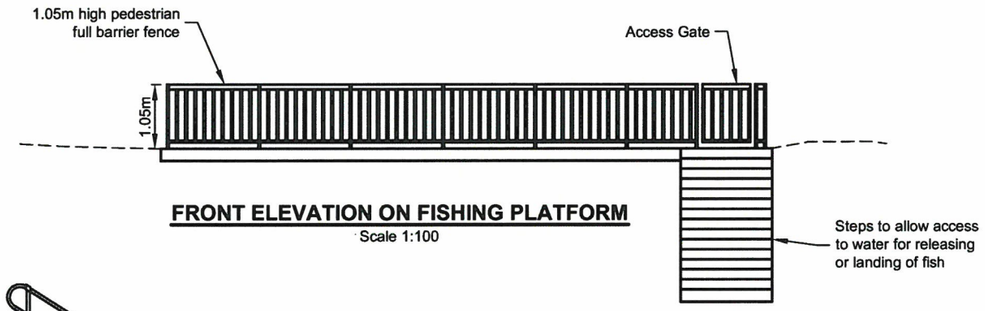

FRONT ELEVATION ON FISHING PLATFORM
Scale 1:100

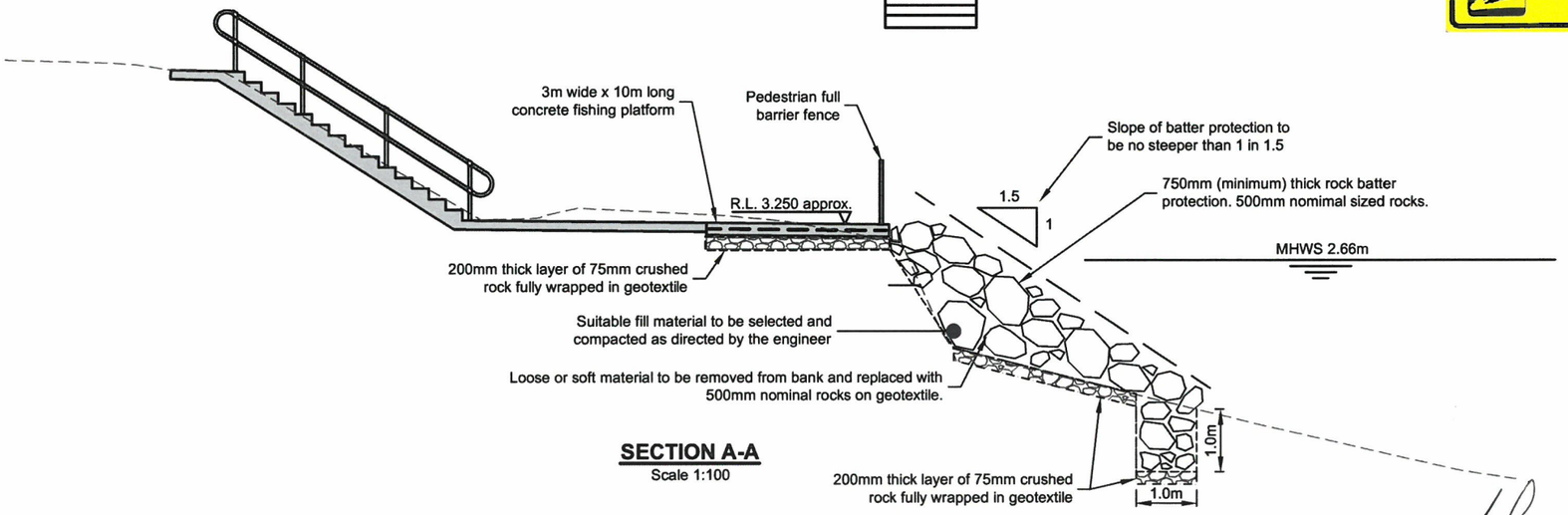

SECTION A-A
Scale 1:100

FOR CONSTRUCTION
12/06/2019

Surveyed: NS	Date: MAY '17	0 1.0 2.0m DETAILS	1:100		
Ref Mark: PSM 45159	R.L. 5.534	0 0.5 1.0m DETAILS	1:50		
Datum: Horiz.GDA '94 Vert. AHD		0 0.2 0.4m DETAILS	1:20		
Zone: 56	Survey Book:NS03				
File Ref: 2017-214-03.dwg					
XREF:		SCALES	FULL SIZE	A3	
Aux Plans:					

	AMENDMENTS DESCRIPTION	DRAWN	APPR'D	DATE
B	Platform level raised by 100mm	RWB		
A	Original Issue	RWB	M CROW	FEB '18

Rockhampton Regional Council

Designed	RWB	JAN '17
Checked	BS	6/19
Examined		
Recomm.	RH	6/19

APPROVAL
RPEQ No 7187 DATE 19/6/19
MANAGER INFRASTRUCTURE PLANNING

FISHING PLATFORM

LUCIUS STREET & THE BEND INTERSECTION (DEPOT HILL)
LAND BASED FISHING INFRASTRUCTURE
TYPICAL SECTION & DETAILS

Dwg No. 2017-214-03
Sheet No. 3 of 3
Job No: C.1074780
A B

O:\Regional\Eng\Design\Design Office Projects\2017\214 - Lucius Street Fishing Platform\ACAD Dwgs\2017-214-01B,02B,03B.dwg, 12/06/2019 10:39:12 AM, tiegsr

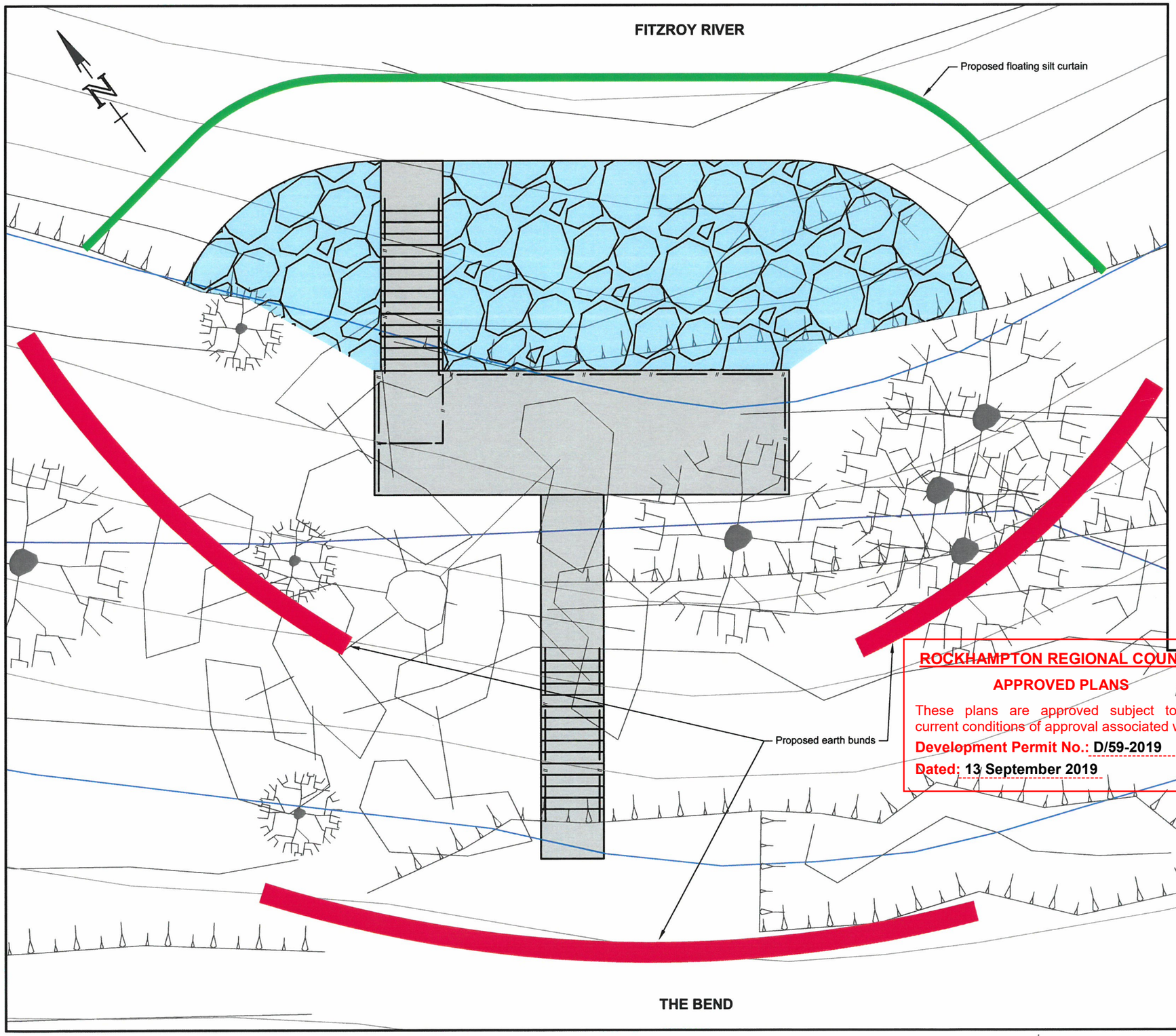

1. Earth Bunds

Stormwater runoff will be redirected away from the work area by means of 300mm high earth embankments. Embankments to be in place prior to any stripping of vegetation or topsoil. Stripping of vegetation and topsoil will be kept to a minimum.

2. Floating silt curtain

Suitable proprietary silt curtain to be installed prior to, and remain in place for the duration of, any works within the tidal zone. Silt curtain to be installed in accordance with manufacturer's recommendations.

3. Monitoring

The sediment controls will be monitored during and after rain events. Inspections will be carried out weekly on the bunds and daily on the silt curtain to ensure that they are functioning correctly and any repairs or alterations shall be carried out within 24 hours.

4. Acidic soils

Testing to determine the acidic/alkaline nature of the soil shall be undertaken prior to and during any excavation below 5m AHD, as directed by the project manager/engineer. pH<2 indicates the likely presence of Acid Sulphate Soil (ASS). In addition, a visual inspection of the excavated soil will be undertaken to note any yellow mottled soils that may be indicative of ASS. If ASS is likely to be present, appropriate management measures will be implemented in accordance with Queensland ASS management guidelines.

5. Dust suppression

A water truck will be used as required to minimise dust during construction activities and promote vegetation regeneration.

6. Restoration of site

At the completion of construction, any removed topsoil will be replaced. The area will be re-vegetated to the pre-construction state. A water truck will be utilised on a regular basis (as required) to promote grass re-establishment.

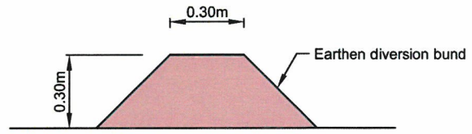

BUND - TYPICAL SECTION

Scale 1:25

ROCKHAMPTON REGIONAL COUNCIL

APPROVED PLANS

These plans are approved subject to the current conditions of approval associated with

Development Permit No.: D/59-2019

Dated: 13 September 2019

LEGEND:

- New Concrete Fishing Platform, Stairs & Footpath
- Bank Protection
- Diversion Bund *Indicative location*
- Floating Silt Curtain *Indicative location*

FOR CONSTRUCTION

30/08/2019

Surveyed: NS	Date: MAY '17				
Ref Mark: PSM 43159	R.L. 5.534				
Datum: Horiz.GDA '94 Vert. AHD					
Zone: 56	Survey Book:NS03				
File Ref: 2017-214-50.dwg					
XREF: 2017-214-00.dwg					
Aux Plans:					

0 1.0 2.0m 1:100 PLAN

SCALES FULL SIZE A3

	AMENDMENTS DESCRIPTION	DRAWN	APPR'D	DATE
B	Floating silt curtain added	RWB		
A	Original Issue	RWB	M CROW	AUG '19

Rockhampton Regional Council

Designed	RWB	AUG '19
Checked	BG	8/19
Examined		
Recomm.	D.	08/19

APPROVAL

RPEQ No 7187 DATE 4/9/19

MANAGER INFRASTRUCTURE PLANNING

FISHING PLATFORM

LUCIUS STREET & THE BEND INTERSECTION (DEPOT HILL)

LAND BASED FISHING INFRASTRUCTURE

EROSION & SEDIMENT CONTROL PLAN

Dwg No. 2017-214-90

Sheet No. 4 of 4

Job No: C.1074780

A B

O:\Regional\Eng\Design\Design Office Projects\2017\214 - Lucius Street Fishing Platform\ACAD Dwgs\2017-214-90B.dwg, 30/08/2019 7:36:36 AM, bywaterr

Part 3Performance outcomes and acceptable outcomes

Table

Column 1 **Performance outcome**	Column 2 **Acceptable outcome**
Character and amenity (generally)—prescribed tidal works not in a canal	
2.1 Prescribed tidal works not in a canal are compatible with their location, having regard to the following— (a) the character and amenity of the works' immediate surroundings and the locality within which the works are located; (b) if the relevant planning scheme states the desired character or amenity for the works' immediate surroundings or the locality within which the works are located—the stated desired character or amenity.	The design and construction of the prescribed tidal works is consistent with the following standards— (a) The fishing platform and erosion protection does not extend past the side boundary of the connecting lot. (b) The proposed fishing platform is the only structure of this type on the river fronting the adjacent lot. (c) (ii) The fishing platform is not roofed.
Character and amenity (height, scale and size)	
3.1 Prescribed tidal works are of a height, scale and size to ensure the works are compatible with the character and amenity of their location, having regard to the following— (a) the height, scale and size of the natural features of the works' immediate surroundings and the locality within which the works are located; (b) the height, scale and size of the existing buildings or other structures in the works' immediate surroundings and the locality within which the works are located; (c) if the relevant planning scheme states the desired height, scale or size of buildings or other structures in the works' immediate surroundings or the locality within which the works are located—the stated desired height, scale or size.	The fishing platform, access stairs and bank protection follow the profile of the existing ground. The pedestrian fence and solar light are the only elements extending above ground level. **ROCKHAMPTON REGIONAL COUNCIL** **APPROVED PLANS** These plans are approved subject to the current conditions of approval associated with **Development Permit No.: D/59-2019** **Dated: 13 September 2019**
Character and amenity (materials and colours)	
4.1 The materials used for, and the colours of, prescribed tidal works are compatible with the character and amenity of the works' location, having regard to the following— (a) the natural features of the works' immediate surroundings and the locality within which the works are located;	The main construction materials are concrete for the platform and stairs and natural rock for the bank protection. The bank protection will match the existing treatment along the river bank in this region.

(b) the existing buildings or other structures in the works' immediate surroundings and the locality within which the works are located; (c) if the relevant planning scheme states the desired materials to be used for, or desired colours of, buildings or other structures in the works' immediate surroundings or the locality within which the works are located—the stated desired materials or colours.	
Lighting	
5.1 Lighting, other than an aid to navigation, for prescribed tidal works is installed in a way to ensure the security and safe use of the works without causing significant adverse effects on the amenity of the locality within which the works are located.	The lighting for the prescribed tidal works, other than an aid to navigation, is consistent with the following standards— (a) The solar lighting is hooded and directed downwards. Details of example products can be supplied.
Signage	
6.1 A sign erected or otherwise placed in position for prescribed tidal works, other than a sign erected or placed for safety reasons or under an Act— (a) is compatible with the character and amenity of the works' immediate surroundings and the locality within which the works are located; and (b) is not a dominant feature of the works, unless the dominance is for safety reasons.	A sign erected or otherwise placed in position for prescribed tidal works, other than a sign erected or placed for safety reasons or under an Act, is consistent with the following standards— All proposed signage is for safety.
Earthwork, vegetation and rehabilitation	
7.1 Excavation and filling for prescribed tidal works— (a) is carried out only to the extent reasonably necessary for the works; and (b) does not have a significant adverse effect on— (i) the natural features, including the banks, of the tidal water in the works' immediate surroundings; or (ii) the level of the surface of the land under the tidal water in the works' immediate surroundings or any foreshore near the works.	The earthwork and filling for the prescribed tidal works is consistent with each relevant planning scheme standard. (a) Earthworks will be minimised to within the required extents of the works. (b) (i) The natural features of the bank will be maintained immediately outside of the proposed works. (ii) The level of the river bed will not be modified as part of the works.
7.2 The location and construction of prescribed tidal works ensures vegetation is cleared or disturbed only to the extent reasonably necessary for the works.	Vegetation on land affected by the prescribed tidal works is dealt with in a way consistent with the following standards—

	(a) Clearance of vegetation for stockpiling and parking etc. is not required as a maintained grassed area within RRC land is located adjacent to the construction works. This area will be utilised for storage etc. during construction.
7.3 After the construction of prescribed tidal works, any land damaged or destabilised by, and any vegetation damaged, destroyed or removed by, the construction of the works is rehabilitated.	Any land damaged or destabilised by the prescribed tidal works will be restored and stabilised. Any vegetation damaged, destroyed or removed by prescribed tidal works will be replaced with native vegetation for the locality within which the works are located, to the extent it is reasonably practicable to replace the vegetation with native vegetation.
Public access—availability	
8.1 Prescribed tidal works do not have a significant adverse effect on the availability of public access to, along or across State coastal land.	The design and construction of the prescribed tidal works is consistent with the following standards— (a) The prescribed tidal works do not involve the erection or placement of any physical barrier preventing existing public access to, along or across State coastal land near the works. The proposed works will provide improved access to the river and not prevent travel along the bank.
Public access—safety	
9.1 The location and design of prescribed tidal works does not adversely affect the safety of members of the public accessing State coastal land.	Public access to State coastal land near the prescribed tidal works will not adversely be affected. The proposed works will provide safer access to the river in a location where fishing activity already take place.
Navigable access to, or egress from, lots that adjoin, or are in the immediate surroundings of, a lot connected to prescribed tidal works	
10.1 Prescribed tidal works that are for a private purpose do not adversely affect navigable access to, or navigable egress from, any lot that adjoins, or is in the immediate surroundings of, a lot connected to prescribed tidal works.	Works are not for a private purpose.
Infrastructure, including, access, parking, sewerage and water services	
11.1 Prescribed tidal works have appropriate infrastructure, including, in particular, road access, parking facilities, sewerage services and water services, having regard to the following— (a) the nature and scale of the works;	The infrastructure for prescribed tidal works is consistent with each relevant planning scheme standard. Road access is available to within 20m and informal parking available within the same distance from the proposed fishing

(b) the number of people that may be on or at the works at any given time; (c) the number of vehicles that may be on or moored at the works at any given time; (d) the protection of any foreshores near the works and the vegetation and marine plants on the foreshores.	platform access point. Water and sewerage services are not proposed due to the relatively low volume of public use.
Design, construction and safety—all prescribed tidal works	
12.1 Prescribed tidal works are designed and constructed in a way to ensure they are structurally sound, having regard to the following— (a) relevant engineering standards; (b) the location of the works; (c) the purpose for which the works are to be used; (d) the impact of flooding, storm tide, overtopping by waves, projected sea level rise, tidal influences and hydrodynamic forces; (e) the design life of the works; (f) the dead load of the works and the intended live load for the works; (g) the impact of hydrostatic pressures on the works; (h) the stability of individual components of the works, including, for example, boulders, concrete blocks or sandbags.	The design and construction of the prescribed tidal works is consistent with the following standards— (a) The Australian Standards that relate to the different elements of the work have been considered, including pubic access, concrete slabs, fencing and embankment stabilisation. (b) The location of the works is required to be on the river bank in an area that is currently used for fishing and has good fishing potential. (c) The structure has been designed to provide safe and easy access for fishing. (d) The platform will be submerged during flood events, as such the main structure including the slab, stairs and embankments have been designed to be robust to withstand this. There may be damage to the railings but these are easily replaced, low value items. (e) The design life of the main structure is 20 years with suitable maintenance. (f) Dead loads are minimal and comprise only of the self-weight of the slab/stairs. Live loads are minimal as vehicle access is not possible however light vehicle loads have still be considered in the design. (g) All elements of the works are ground bearing and of solid construction, therefore applied the hydrostatic pressures will not have a significant impact. (h) The structure is made from reinforced concrete and boulders on a 1 in 1.5 slope which will interlock to provide stability.

12.2 Prescribed tidal works do not adversely affect the structural integrity of any existing revetment or seawall or another existing structure.	(a) The proposed works do not directly connect to any existing revetment, seawall or other structure.
12.3 Prescribed tidal works are designed and constructed in a way to ensure they do not adversely affect the stability of the bed and banks of tidal water.	(a) The proposed works will have minimal influence on the existing bank profile of the river. The works will locally reduce erosion of the bank and improve stability.
12.4 Prescribed tidal works are designed and constructed using materials suitable for marine environments, having regard to their ability to resist the following— (a) attack by marine organisms; (b) corrosion; (c) deterioration or breakage resulting from exposure to environmental conditions including, for example, the following— (i) abrasion; (ii) immersion in seawater; (iii) wave action.	Materials to be used are concrete, stone, steel and geofabric (a) All materials are resistance to attack by marine organisms. (b) & (c) Stainless steel is to be used for the lower handrail which will be regularly submerged. Higher strength concrete has been specified with increase cover to the reinforcement to provide increased durability from exposure to salt water. Large boulder size of 500mm has been specified to reduce movement from wave action.
12.5 Prescribed tidal works are designed and constructed in a way to ensure they do not adversely affect the operation or maintenance of any existing stormwater outlet.	(a) There are no stormwater outlets in the vicinity of the proposed works.
12.6 Prescribed tidal works are designed and constructed in a way to ensure they do not adversely affect the water quality of tidal water, including, in particular, as a result of— (a) release, into the tidal water, of materials used in the construction of the works; or (b) disturbance to the sediment on the bed and banks of the tidal water; or (c) exposure to acid sulphate soils.	(a) An erosion and sediment control plan has been developed to manage introduction of material into the river. (b) Disturbance to sediment on the bed and banks of the river will be minimised and the works at the base of the bank will be completed at low tide. (c) Removal and treatment of acid sulphate soil has been allowed for in the construction contract and will be managed and dealt with by the contractor.
12.7 Prescribed tidal works are designed and constructed in a way to ensure they are safe for persons using the works.	The design and construction of the prescribed tidal works is consistent with the following standards—

	(a) The access to the platform has been design in accordance with *AS 1657- 2013: Fixed platforms, walkways, stairways and ladders - Design, construction and installation.* (i) The concrete step surface is to be roughened and grooved to increase friction (ii) All accessible surfaces are to be flush and smooth (b) The platform is fenced to prevent access onto the embankment. The stairs have handrails on both sides.
	(c) Stairs are provided from the platform into the water
12.8 Appropriate measures are taken for prescribed tidal works for a non-private purpose to ensure an unsupportable live load is not applied to the works by persons or vehicles.	(a) The concrete platform is ground bearing and not accessible by vehicles. The allowable live load cannot be exceeded from pedestrian loading.
12.9 Prescribed tidal works, other than a prescribed deck for a private purpose, are designed and constructed in a way to ensure the use of tidal water in a canal for a non-maritime purpose is minimised.	The fishing platform is specifically designed to increase maritime activities.
12.10 Prescribed tidal works that are a prescribed deck and for a private purpose, are designed and constructed in a way to ensure the use of tidal water in a canal for a non-maritime purpose is minimised.	Not for a private purpose.
Design, construction and safety—revetments and seawalls	
19.1 Prescribed tidal works that are a revetment or seawall, are designed and constructed in a way to ensure the revetment or seawall is able to support its intended loads, having regard to its relevant loading matters and its intended design life.	The same design has been utilised at a number of locations along the Fitzroy River in this area. The design and construction of the embankment considers the following Australian Standards: (i) AS/NZS 1170.0; (ii) AS/NZS 1170.1; (iii) AS/NZS 1170.2; (iv) AS 1170.4; (v) AS 4997; (b) subject to paragraph (c), AS 4678 to the extent requirements stated in the Standard apply to earth-retaining structures;

	The applied loads including, pedestrians, vehicles, wind and waves/flood are minimal. The structure is considered to be minor and low risk with a design life of 20 years.
19.2 Prescribed tidal works that are a revetment or seawall, are designed and constructed in a way to ensure the revetment or seawall can withstand— (a) any tendency of overturning or sliding; and (b) any other effects of waves or changes in water levels on the revetment or seawall.	The embankment design considers stability against overturning and is designed to be a flexible gravity retaining wall. A toe/key has been provided to resist sliding. (a) The stone size has been selected to resist movement from waves and river flow during flood events including a storm with and AEP of 2%. River level rise during the design life has been considered, the impact on the structure is negligible. (b) The design and construction of the embankment considers the following Australian Standards with respect to structural stability and wave/water loading. (i) AS/NZS 1170.0; (ii) AS/NZS 1170.1; (iii) AS/NZS 1170.2; (iv) AS 1170.4; (v) AS 4997;
	(c) subject to paragraph (d), AS 4678 to the extent requirements stated in the Standard apply to earth-retaining structures;
19.3 Prescribed tidal works that are a revetment or seawall are designed and constructed to protect the revetment or seawall from erosion at the base of the revetment or seawall.	(a) A 200mm thick layer of crushed rock wrapped in geotextile is provided beneath the main rock amour to filter material and prevent erosion of the land under the embankment. (b) the bottom edge of the base of the embankment has a toe which extends below the river bed to protect it from being undermining by scour; (c) TMR standard drawings 4021 is referenced for the specification of the grading and sizing of the rock (and geofabric) in accordance with AS 2758.

19.4 Prescribed tidal works that are a revetment or seawall are not adversely affected by hydrostatic pressure.	The design and construction of the revetment or seawall is consistent with the following standards— (a) The requirement of AS 4678 with respect hydrostatic pressure for earth-retaining structures have been considered in the design of the embankment. The rock embankment has adequate capacity to withstand the loading applied by the hydrostatic pressure as a result of the changing tidal water levels within the river.